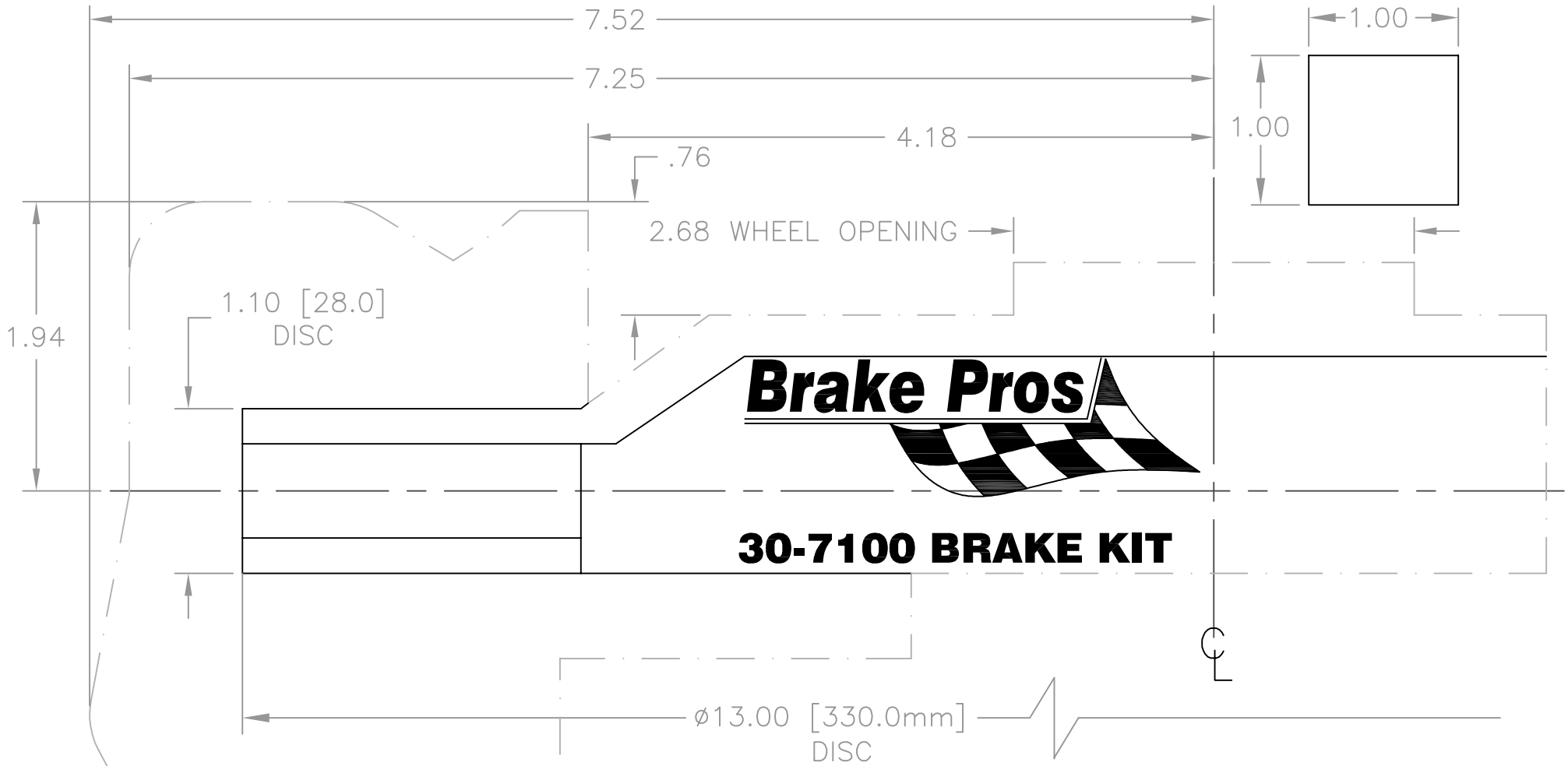

CUT AROUND PROFILE

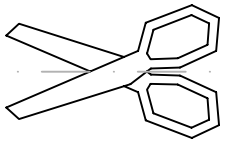

NOTES:

1. PRINT AND CHECK SCALE ON 1.0" SQ REF DIMS. IT MAY BE NECESSARY TO ENLARGE OR REDUCE PRINT TO PROPER SCALE. SCALING IS CRITICAL
2. STICK TEMPLATE TO CARD AND CUT AROUND PROFILE (DASH LINE) AS INDICATED
3. LOCATE TEMPLATE IN WHEEL CENTER AND ROTATE TO ENSURE CLEARANCE, PAY SPECIAL ATTENTION TO WHEELS WEIGHTS.